Assignment 8 Discussions

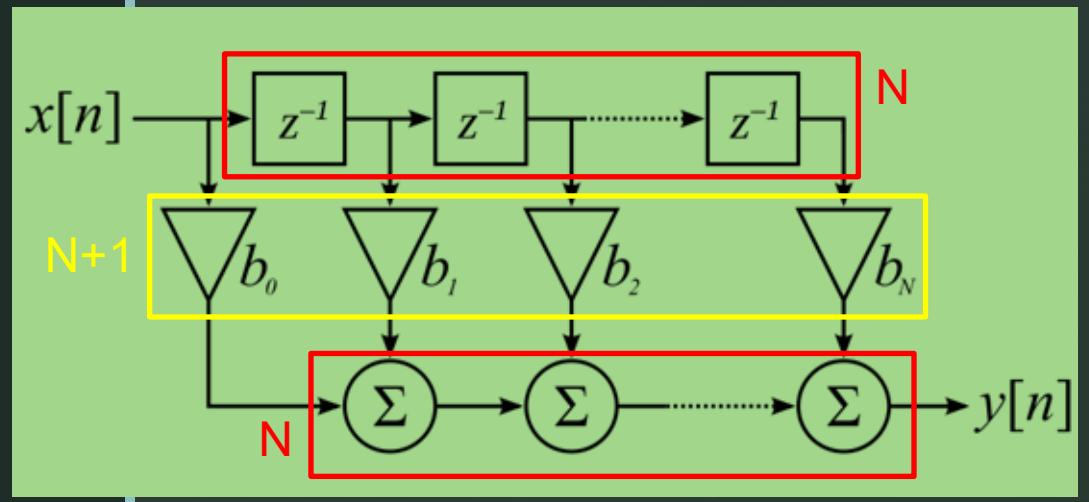

FIR Orders and Calculations

The Nth-order FIR structure shown above is this formula:

$$(x \times b_0) + \underbrace{(z^{-1} \times b_1) + (z^{-2} \times b_2) + (z^{-3} \times b_3) + \cdots + (z^{-N} \times b_N)}_{\text{N terms}}$$

- N delays `sc_signal<sc_uint<32>> mid[N]` which are z^{-1}, z^{-2} to z^{-N}.
- $N + 1$ amplifiers (multiply by b_i)
  - $x \times b_0$ // 1 amplification (blocking multiplication)
  - `mid[0]` $\times\ b_1$ to `mid[N-1]` $\times\ b_N$ // N amplifications (blocking multiplications)
- With N blocking additions to sum up above $N + 1$ terms
- Finally, N non-blocking shifts as below

```
mid[0] = x;                    // The first shift
for (int j = 1; j < N; j++)    // Followed by N-1 shifts
    mid[j] = mid[j-1];         // Note j starts from 1, not 0
```

Data Structure for hardware designs

- For hardware designs, declare the entire data structure in `SC_MODULE`. Avoid declaring any data inside the process function and member functions.
- Also, do not use any STL data structure for synthesizable circuits. They can be used in the test bench, but not suitable in synthesizable circuits. And I believe no HLS tools support STL.
- You do not need any complicate and pointer heavy data strctures for real circuit designs anyway. Simple C-style array is the most complicated one you need.

Reasons to take points off (1/2) and not to add 10 extra points

1. 110 is the highest possible score.
2. Asynchronous reset, no extra 10 pts. Note the spec says synchronous reset.
3. Incorrect FIR calculation, 10 pts off:
   1. Please refer to the previous page and the example code.
   2. `sc_uint<32>` should be used for the data type of delays, not `sc_fixed<32,16>`.
   3. Delays, or shift register so to speak, not wrapped by `sc_signal` for non-blocking assignments. `sc_signal<sc_uint<32>>` should be used to declare delays.
   4. Incorrect use of a 64-bit register to store the multiplication.
4. Coding style issue.
5. No reset pin specified, i.e. neither `reset_signal_is()` nor `async_reset_signal_is()` is called.
6. No `firData` submitted.

Reasons to take points off (2/2)

1. Incorrect input file name, e.g. `firData.txt`.
2. Incorrect `main.cpp`, i.e. no reading the input file .
3. Two constructors.
4. Declare delays in the process function. Instead, for hardware designs the entire data structure should be declared in the `SC_MODULE`.
5. Incorrect `SC_CTHREAD` modeling.
6. Incorrect reset behavior.
7. Fixed number of delays, e.g. 64, declared. Should be a dynamic number of delays depending on declared order size.
8. Out of spec `fir16` declared.
9. Fixed point data types not included, i.e. `SC_INCLUDE_FX` not defined